LED Module Spot Down Light



PRODCT PROFILE

Order Code	Lumen	Power	Voltage	Beam Angle	CCT	CRI
CST_LSDL 0108580	1100lm	10W	220-240V	15/24/38°	3000K/4000K	Ra≥90
CST_LSDL 0158580	1560lm	15W	220-240V	15/24/38°	3000K/4000K	Ra≥90

COB | >.95 PF | 50.000h | 220V 240V Voltage





Technical Drawing

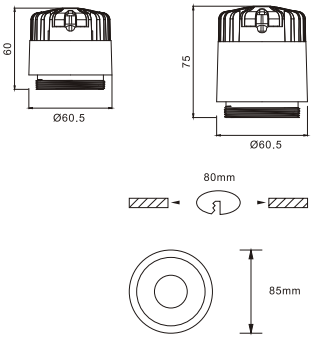

Product Features

- Body of the luminaire is made of aluminium
- Patented heat outlet for long lifespan to optimise maintenance
- High quality COB chips & High luminous efficacy
- 60% - 80% energy saving in relation to halogen& CFL sources
- Replacement to halogen or CFL downlights
- Excellent light spot, comfortable to eyes, no flicker, no strobe.
- Environmental friendly, No UV or IR radiation, no noise.
- High CRI more than 80, approximate to the nature light.

Optional LED Chip Brands

EPISTAR PHILIPS OSRAM NICHIA BRIDGELUX CREE

Standards

DLC UL LISTED FC SAA CE CB GS RoHS



PRODCT PROFILE

Order Code	Lumen	Power	Voltage	Beam Angle	CCT	CRI
CST_LSDL 01010090	1100lm	10W	220-240V	15/24/38°	3000K/4000K	Ra≥90
CST_LSDL 01510090	1560lm	15W	220-240V	15/24/38°	3000K/4000K	Ra≥90

COB | >.95 PF | 50.000h | 220V 240V Voltage





Technical Drawing

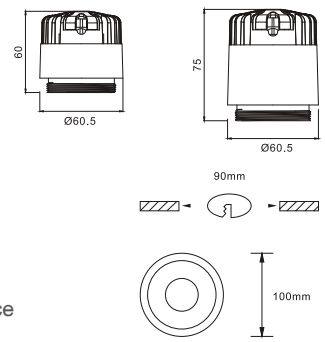

Product Features

- Body of the luminaire is made of aluminium
- Patented heat outlet for long lifespan to optimise maintenance
- High quality COB chips & High luminous efficacy
- 60% - 80% energy saving in relation to halogen& CFL sources
- Replacement to halogen or CFL downlights
- Excellent light spot, comfortable to eyes, no flicker, no strobe.
- Environmental friendly, No UV or IR radiation, no noise.
- High CRI more than 80, approximate to the nature light.

Application

