

LED Garden Light



PRODUCT PROFILE

Order Code	Lumen	Power	Dimensions	Beam Angle	CRI
CST_LGL 00665091	540lm	6W	650*105*91mm	70°	Ra≥80
CST_LGL 00645091	540lm	6W	450*105*91mm	70°	Ra≥80
CST_LGL 00621591	540lm	6W	215*105*91mm	70°	Ra≥80

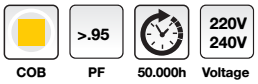



Materials : Die - casting aluminium body & Glass diffuser

Technical Drawing

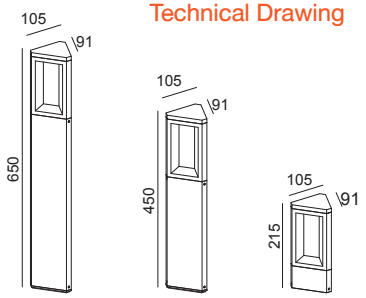



- Optional LED Chip Brands

EPISTAR PHILIPS
OSRAM NICHIA
BRIDGELUX CREE

- Standards





PRODUCT PROFILE

Order Code	Lumen	Power	Dimensions	Beam Angle	CRI
CST_LGL 00665090	540lm	6W	650*90mm	70°	Ra≥80
CST_LGL 00645090	540lm	6W	450*90mm	70°	Ra≥80
CST_LGL 00620090	540lm	6W	200*90mm	70°	Ra≥80

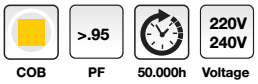



Technical Drawing

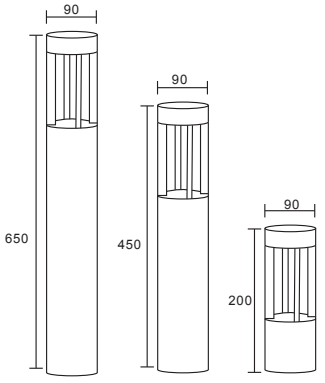

- Application

